Jan. 22, 1929. 1,700,021

L. BRUCKMANN

POCKET LIGHTER

Filed July 9, 1927

Fig. 1.

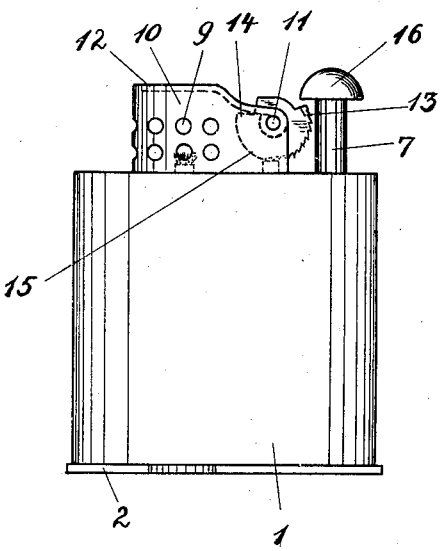

Fig. 2.

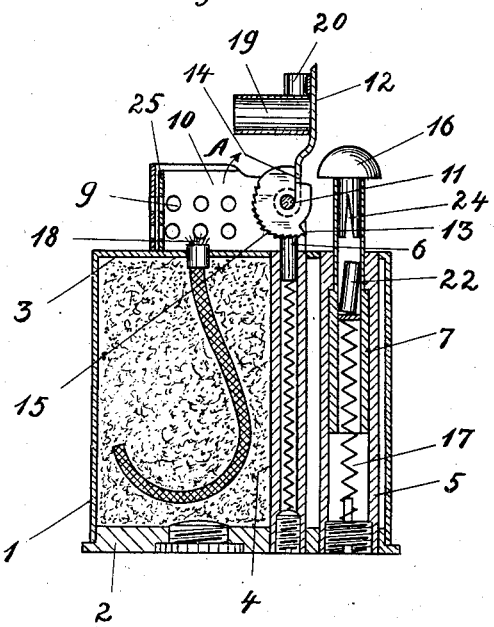

Fig. 3.

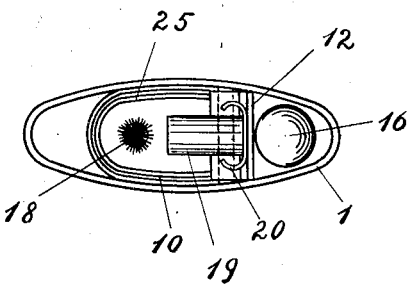

Inventor
Ludwig Bruckmann
by [illegible]
Atty